REV.	ECN.NO.	DATE
A	RELEASED	01/06-'07

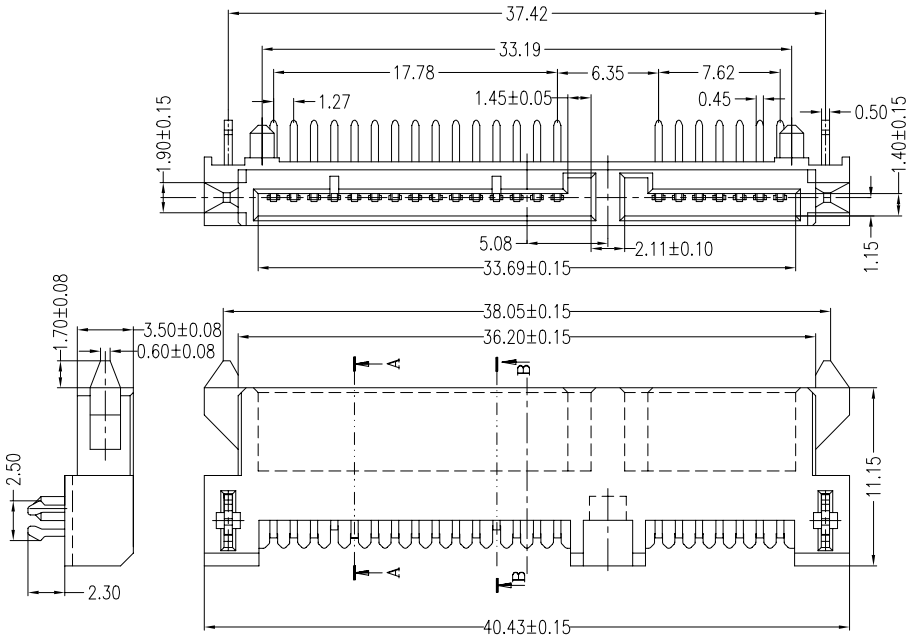

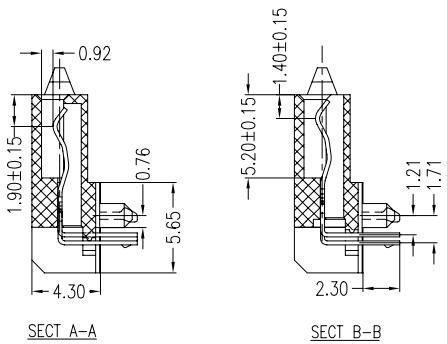

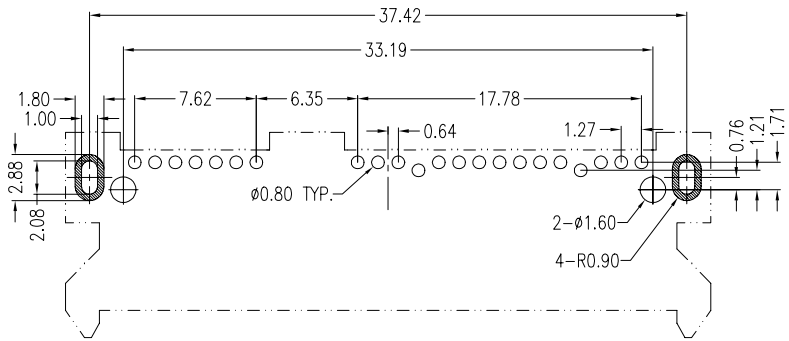

P.C.B LAYOUT (T=1.2)
TOP VIEW

Notes:

*Material

Housing: LCP, UL 94V-0 rated;
Color: Black.
Contact: Phosphor Bronze
Plating: Gold Plating over Nickel on contact area
Tin plating on solder Tail.

*Mechanical

Insertion Force: 45N max.
Withdrawal Force: 10N min.
Durability: 500 cycles

*Electrical Specification

Operation Voltage: 100 VAC max.
Current Rating: 1.5 Ampere per contact
Contact Resistance: 30 Milliohms max.
Insulation Resistance: 1000 Megohms min.
Dielectric Withstanding Voltage: 500 VAC

*Environmental

Operating Temperature: -55°C to +125°C

*How to Order:

WATB 22 D L 1 P C U

- U: W: Winning Mark / Blank: No Mark
- U: U:Lead Free
- C: C: Reverse Dip Type(4.30mm)
- P: P: Phosphor Bronze
- 1: 1: Black
- L: L: LCP
- D: Selective Gold: D:15u"A:Flash
- 22: NO. of Contacts
- WATB: Series No.

REV					
Units	mm	Scale	2:1	Drawing By WHL	Data 01/15-'07
Tolerance Unless Otherwise Specified				Reviewed By Jflee	Data 01/15-'07
.X ~ ±0.38				Approval By Richard	Data 01/15-'07
.XX ~ ±0.25					
.XXX ~ ±0.20					
Angle ~ ± 3°					

Date	01/06-'07	Title	WATB S ATA 7+15P 90°Female Reverse Dip Type(4.30mm)
Sheet	1 of 1		
Third Angle Projection		Drawing No.	W070107
		REV	A